CR11
card reader
engineering drawings

DIGITAL EQUIPMENT CORPORATION • MAYNARD, MASSACHUSETTS

1st Edition August 1971

Copyright © 1971 by Digital Equipment Corporation

The material in this manual is for informational purposes and is subject to change without notice.

The following are trademarks of Digital Equipment Corporation, Maynard, Massachusetts:

DEC	PDP
FLIP CHIP	FOCAL
DIGITAL	COMPUTER LAB
UNIBUS	

CR11 ENGINEERING DRAWINGS

Drawing Number	Title
A-ML-CR11-0	Card Reader Control
A-PL-CR11-0-0	Card Reader Control, Parts List
D-MU-CR11-0-01	CR11 Module Utilization
A-PL-CR11-0-01	CR11 Module Parts List
D-CS-M8290-0-1	CR11 Interface
D-IA-7008738	Card Reader Cable

MASTER DRAWING LIST

MAINTENANCE MANUALS NO.	TITLE	UNIT VARIATIONS CR11-Ø
CR11-Ø	CARD READER	X

USED ON OPTIONS
CM11-Ø

REVISIONS

REV.	DATE	CHG. NO.	APP'D.
A	7/71	MISC-86	A.V.
B	7/71	00002	F.V.
C	2/72	00003	
D	7/72	00004	
E	11/72	00005	

DRN. K. RUSS	DATE 3/15/71	digital EQUIPMENT CORPORATION MAYNARD, MASSACHUSETTS
CHK'D. R. COOK	DATE 3/23/71	
ENG. R.KRISHNA	DATE 3/23/71	TITLE: CARD READER CONTROL
PROJ. ENG. R.KRISHNA	DATE 3/23/71	
PROD. D. CALL	DATE 3/25/71	
FIRST USED ON: PDP11		SIZE A · CODE ML · NUMBER CR11-Ø · REV. E
SCALE #		
SHEET 1 OF 2		DIST.

PRINT SET CR11-Ø	DWG. NO.	REV. LET.	NO. OF SHEETS	TITLE	OPTION NO.
X	A-PL-CR11-Ø-Ø	C	1	CARD READER CONTROL	
X	D-MU-CR11-Ø-Ø1	A	1	CR11 MODULE UTILIZATION	
X	A-PL-CR11-Ø-Ø1	A	1	CR11 MODULE COUNT	
~~X~~	~~D-BS-CR11-Ø-Ø2~~		~~1~~	~~DEVICE CONTROL~~	
X	A-AL-CR11-Ø-Ø3		1	ACCESSORY LIST	
~~X~~	~~D-CS-M829-Ø-1~~	~~#~~		~~READER CONTROL~~	
~~X~~	~~C-CS-M1Ø85-Ø-1~~	~~#~~		~~ADDRESS SELECTOR~~	
~~X~~	~~D-CS-M782-Ø-1~~	~~#~~		~~INTERRUPT CONTROL~~	
X	D-CS-M829Ø-Ø-1	A	#	CR11 INTERFACE	

TITLE: CARD READER CONTROL · SHEET 2 OF 2 · SIZE A · CODE MI · NUMBER CR11-Ø · REV E

4

DIGITAL EQUIPMENT CORPORATION
MAYNARD, MASSACHUSETTS

PARTS LIST

MADE BY KEN RUSS	CHECKED R. Cook 3-23-71	SECTION 1
ENG DATE R Krishna 3/23/71.	PROD DATE M Cull 3/25/71	ISSUED SECT. 1

ITEM NO.	DWG NO./PART NO.	DESCRIPTION	QUANTITY/VARIATION CR11-A	CR11-B
1	A-PL-CR11-Ø-Ø1	MODULE COUNT	1	1
~~2~~	~~D-IA-7007174-0-0~~	~~CARD READER CABLE~~	—	
3	3010639-1	CARD READER 60 HZ	1	-
4	3010639-2	CARD READER 50 HZ	-	1
5	7008738	CARD READER CABLE	1	1
6	1210037-4	LOGO (RED)	1	1

TITLE	ASSY NO.	SIZE	CODE	NUMBER	REV.	ECO NO.
CARD READER CONTROL	— // —	A	PL	CR11-Ø-Ø	C	CR11 — 00004
	SHEET 1 OF 1	DIST.				

DEC FORM NO. 16-1031
DRA 110

This drawing and specifications, herein, are the property of Digital Equipment Corporation and shall not be reproduced or copied or used in whole or in part as the basis for the manufacture or sale of items without written permission.

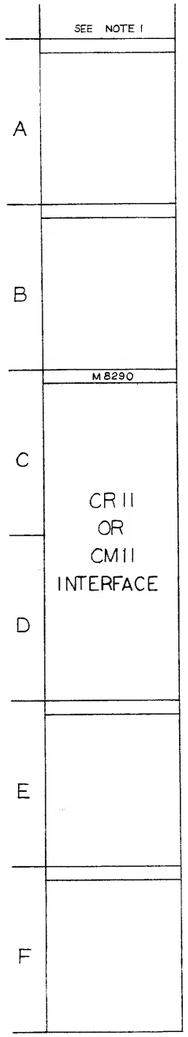

NOTE:
1. SLOT 1, 2, 3 OR 4 IN DD11-A

FIRST USED ON OPTION/MODEL	QTY.	DESCRIPTION	PART NO	ITEM NO.
CR11		PARTS LIST		

UNLESS OTHERWISE SPECIFIED
UNLESS OTHERWISE SPECIFIED
DIMENSION IN INCHES
TOLERANCES
DECIMALS ± .005 FRACTIONS ± 1/64 ANGLES ± 0°30'
FINAL SURFACE QUALITY
REMOVE BURRS AND BREAK SHARP CORNERS

MATERIAL

FINISH

DRN. T. Quillin	DATE 12/3/70	digital EQUIPMENT CORPORATION MAYNARD MASSACHUSETTS
CHK'D. W. Major	DATE 2/18/71	
ENG. P. Krishna	DATE 3/23/71	TITLE MODULE UTILIZATION
PROJ. ENG. P. Krishna	DATE 3/23/71	
PROD. W. Call	DATE 3/25/71	
NEXT HIGHER ASSY A-ML-CR11-Ø		SIZE D CODE ML NUMBER CR11-Ø-Ø1 REV. A
SCALE		
SHEET 1 OF 1		DIST.

REVISIONS

CHK	CHANGE NO.	REV.
	CR11-00003	A
	M. Tonn 2-16-72	
	KRISHNA	
	Krishna 2-18-72	

DEC FORM NO DRD 102A

SIZE D CODE ML NUMBER CR11-Ø-Ø1 A

6

DIGITAL EQUIPMENT CORPORATION
MAYNARD, MASSACHUSETTS

PARTS LIST

MADE BY W. MAJOR	CHECKED W. MAJOR	SECTION
DATE 12/18/70	DATE 2/18/71	1
ENG DATE 3/23/71	PROD DATE 3/25/71	ISSUED SECT. 1

ITEM NO.	DWG NO./PART NO.	DESCRIPTION	QUANTITY/VARIATION
	~~M105~~	~~ADDRESS SELECTOR MODULE~~	~~1~~
	~~M782~~	~~INTERRUPT CONTROL MODULE~~	~~1~~
	~~M829~~	~~DATA BUFFER AND STATUS REGISTER~~	~~1~~
	M8290	CR11 INTERFACE	1
	5408780	PRIORITY JUMPER LEVEL #6	1

TITLE	ASSY NO.	SIZE	CODE	NUMBER	REV.	ECO NO.
~~MODULE~~ UTILIZATION	D-MU-CR11-Ø-Ø~~1~~	A	PL	CR11-Ø-Ø1	A	CR11-00003
	SHEET 1 OF ~~1~~	DIST.				

DEC FORM NO.
DRA 110

This drawing and specifications, herein, are the property of Digital Equipment Corporation and shall not be reproduced or copied or used in whole or in part as the basis for the manufacture or sale of items without written permission.

PARTS LIST

ITEM NO	DRAWING REFERENCE	DESCRIPTION	PART NUMBER	QUANTITY
1		ETCHED CIRCUIT BOARD	5009885	1
2	K-CO-M8290-0-4	X-Y COORDINATE HOLE LOCATION		
3	D-AH-M8290-0-5	ASSEMBLING HOLE LOCATION		
4	B-MH-M8290-0-6	MODULE ECO HISTORY		
5		HANDLE FLIP-CHIP MAGENTA	12006337-06	4
6		EJECTOR SS-4-7 STIMPSON	3006732	8
7		BERG 40 PIN CONNECTOR	1209941	1
8	E17	IC SOCKET	1209838	1
9	C53 THRU C56	CAP 6.8uf 35V 20% S TINT	1000067	4
10	C1 THRU C52	CAP .01 uf 100V 80% Z5U	1001500	52
11	C62	CAP .05uf 100V 80%	1001755	1
12	C64	CAP 330PF 100V 5%	1000023	1
13	C57 THRU C61, C63	CAP .1uf 100V 5%	1000024	6
14	D1 THRU D4	DIODE DEC 664	1100114	4
15	R32	RESISTOR 100Ω 1/4W 5%	1300229	1
16	R48	RESISTOR 180Ω 1/4 W 5%	1301322	1
17	R46	RESISTOR 47Ω 1/4 W 5%	1300202	1
18	R1,R2,R3,R6,R8,R9,R11	RESISTOR 220Ω 1/4W 5%	1300271	7
19	R10, R47	RESISTOR 330Ω 1/4W 5%	1300309	2
20	R4,R5,R7,R12,R29,R30,R31,R33 THRU R45	RESISTOR 1K Ω 1/4W 5%	1300365	20
21	R13 THRU R28	RESISTOR 560Ω 1/4W 5%	1301690	16
22	E8,E11,E16,E22	IC DEC 4015	1910087	4
23	E49,E50	IC DEC 7408	1910155	2
24	E7, E12, E24	IC DEC 7437	1910091	3
25	E5,E47,E53	IC DEC 7474	1905547	3
26	E3,E45,E52	IC DEC 7400	1905575	3
27	E4	IC DEC 7440	1905579	1
28	E23	IC DEC 7473	1905587	1
29	E16,E20,E35,E44	IC DEC 7402	1909004	4
30	E36	IC DEC 74H00	1909056	1
31	E27 THRU E30,E33,E34,E39	IC DEC 380	1909485 *	7
32	E51	IC DEC 74H74	1909687	1
33	E6,E13,E25,	IC DEC 7404	1909826	3
34	E1,E2,E9,E10,E14,E15,E21,E26,E31,E38,E43,E48	IC DEC 8881	1909705	12
35	E32,E37,E42	IC DEC 8242	1909712	3
36	E19,E40,E41	IC DEC 8815	1909713	3
37	E46	IC DEC 74H04	1909931	1

ALLOWABLE SUBSTITUTION LIST			
ORIG PART #	SUBSTITUTION PART		ITEM NO.
	DESCRIPTION	PART #	
1909485	IC 11380	1911113	31

NOTES:

1. PIN NOTATION THROUGHOUT IS ORDERED UPON MODULE PLACEMENT IN THE SYSTEM UNIT. MODULE REFERENCE ALONE IS OBTAINED BY DELETING THE NUMBER (SLOT LOCATION) AFTER THE FIRST LETTER, AND CONVERTING THE FIRST LETTER ACCORDING TO THE PIN NOMENCLATURE CHART AT RIGHT.
2. JUMPERS TO BE USED AT CONNECTIONS A3-A12 N1, V3-V8, J1 AND J2.
3. ON ITEM #31, ALL 7 CHIPS MUST BE EITHER DEC 380'S OR ITS SUBSTITUTE, 11380 I.C.S. COMBINATIONS ARE NOT ALLOWED ON THE SAME OPTION.

*SEE ALLOWABLE SUBSTITUTION LIST & NOTE 3.
GND AND +5V ARE USUALLY PIN 7 AND PIN 14, RESPECTIVELY. EXCEPTIONS ARE:

IC TYPE	GND	+5V
DEC 380	PIN 1	PIN 8
DEC 4015	PIN 8	PIN 16
DEC 7473	PIN 11	PIN 4
DEC	PIN	PIN
DEC	PIN	PIN
DEC	PIN	PIN

COMPONENT PLACEMENT

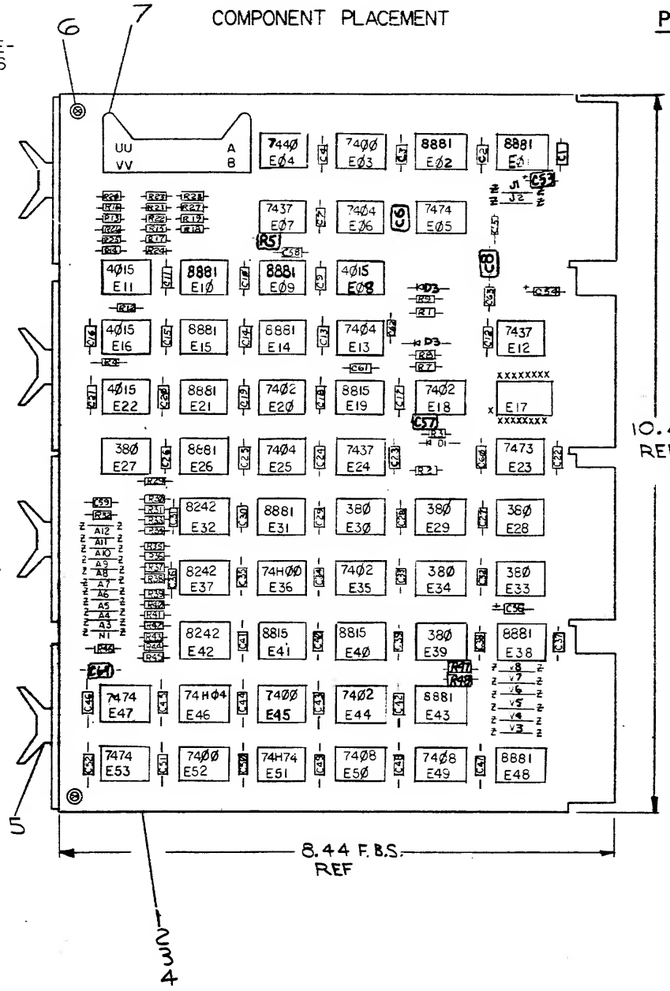

PIN NOMENCLATURE

MODULE	SYSTEM UNIT
A	C
B	D
C	E
D	F

+5V
CA2
DA2
EA2
FA2

C1-C52	C53	C54	C55	C56
.01uf	6.8uf	6.8uf	6.8uf	6.8uf

CC2: CT1
DC2: DT1
EC2: ET1
FC2: FT1

REVISIONS			
CHK	CHANGE NO.	REV	
RGM	M8290-00001	B	6-26-72
	M8290-00002	C	6/27/72

G. Fike 6-26-72
K. KRISHNA
R. Krishna 6/27/72
M8290-00002
I. D. Hale 7/6/72
L. CONDON
R. Condon 7.6.72

ETCH BOARD REV	B	C	
FIRST USED ON PTION/MODEL	QTY.	DESCRIPTION	PART NO. / ITEM NO.
PDP11		PARTS LIST	
UNLESS OTHERWISE SPECIFIED	DRN Margaret Nimphius	DATE 1-26-72	digital EQUIPMENT CORPORATION MAYNARD MASSACHUSETTS
UNLESS OTHERWISE SPECIFIED DIMENSION IN INCHES TOLERANCES DECIMALS ± .005 FRACTIONS ± 1/64 ANGLES ± 2° FINAL SURFACE QUALITY REMOVE BURRS AND BREAK SHARP CORNERS	CHK D. Olson	DATE 7-6-72	TITLE CRII INTEPFACE
	ENG. R. Krishna	DATE 6/27/72	
	PROJ. ENG. L. Condon	DATE 7.6.72	
MATERIAL	PROD. R. Peterson	DATE 3/31/72	CR-1
	NEXT HIGHER ASSY		SIZE D CODE CS NUMBER M8290-2- REV C
FINISH	SCALE 1:1		
	SHEET 1 OF 4		DIST.

DEC FORM NO DRO 102A

This drawing and specifications, herein, are the property of Digital Equipment Corporation and shall not be reproduced or copied or used in whole or in part as the basis for the manufacture or sale of items without written permission.

CH1 BUS D11 L
CJ2 BUS D10 L
CK2 BUS D09 L
CL2 BUS D08 L
CM2 BUS D07 L
CR-2 DATA BIT 6 L
CP2 BUS D05 L
CN2 BUS D04 L
CT2 BUS D03 L
CU2 BUS D02 L
CR2 BUS D01 L
CS2 BUS D00 L

CR-4 SELECT 2 H DJ1
CR-4 SELECT 4 H DE1

INDEX MARKER (L)
R1 220
C82 .005 µf
CR-3 TIMING ERROR (B) H
R2 +5V 220
C57 470 pf
R3 220
D1 D864

ZONE 1 H (T) R24
ZONE 11 H (V) R17
ZONE 4 H (FF) R18
ZONE 10 H (JJ) R20
ZONE 7 H (RR) R25
ZONE 6 H (TT) R14
ZONE 3 H (X) R15
ZONE 5 H (Z) R22
ZONE 8 H (NN) R28
ZONE 9 H (LL) R13
ZONE 12 H (BB) R21
ZONE 2 H (DD) R23

CR-2 HIGH
CR-2 STROBE H
CR-2 CLR READ H
+5V R4 1K

NOTE 1: UNLESS INDICATED OTHERWISE RESISTORS ARE 560 Ω 1/4,5%

NOTE 2: THE FOLLOWING PINS ARE GROUNDED ON THE BERG CONN: B, A, C, L, H, K, M, P, S, U, W, Y, AA, CC, EE, HH, KK, MM, PP, SS, UU, VV

NOTE 3: LETTERS ENCLOSED - EX (JJ) - REFER TO PINS ON THE BERG CONNECTOR

REVISIONS		
CHK.	CHANGE NO.	REV.

FIRST USED ON OPTION/MODEL	QTY.	DESCRIPTION	PART NO.	ITEM NO.
FDP11		PARTS LIST		

UNLESS OTHERWISE SPECIFIED DIMENSION IN INCHES. TOLERANCES
DECIMALS: .XXX ± .005, .XX ± .02, .X ± .1 — ANGLES: ± 0° 30'
REMOVE BURRS AND BREAK SHARP CORNERS SURFACE QUALITY ✓
MATERIAL
FINISH

DRN. DATE
CHK'D DATE
ENG. DATE
PROJ. ENG. DATE
PROD. DATE
NEXT HIGHER ASSY.
SCALE
SHEET 3 OF 4

digital EQUIPMENT CORPORATION MAYNARD MASSACHUSETTS

TITLE CRII INTERFACE (DATA BUFFERS) CR-2

SIZE	CODE	NUMBER	REV.
D	CS	M8290-D-1	C

DIST.

9

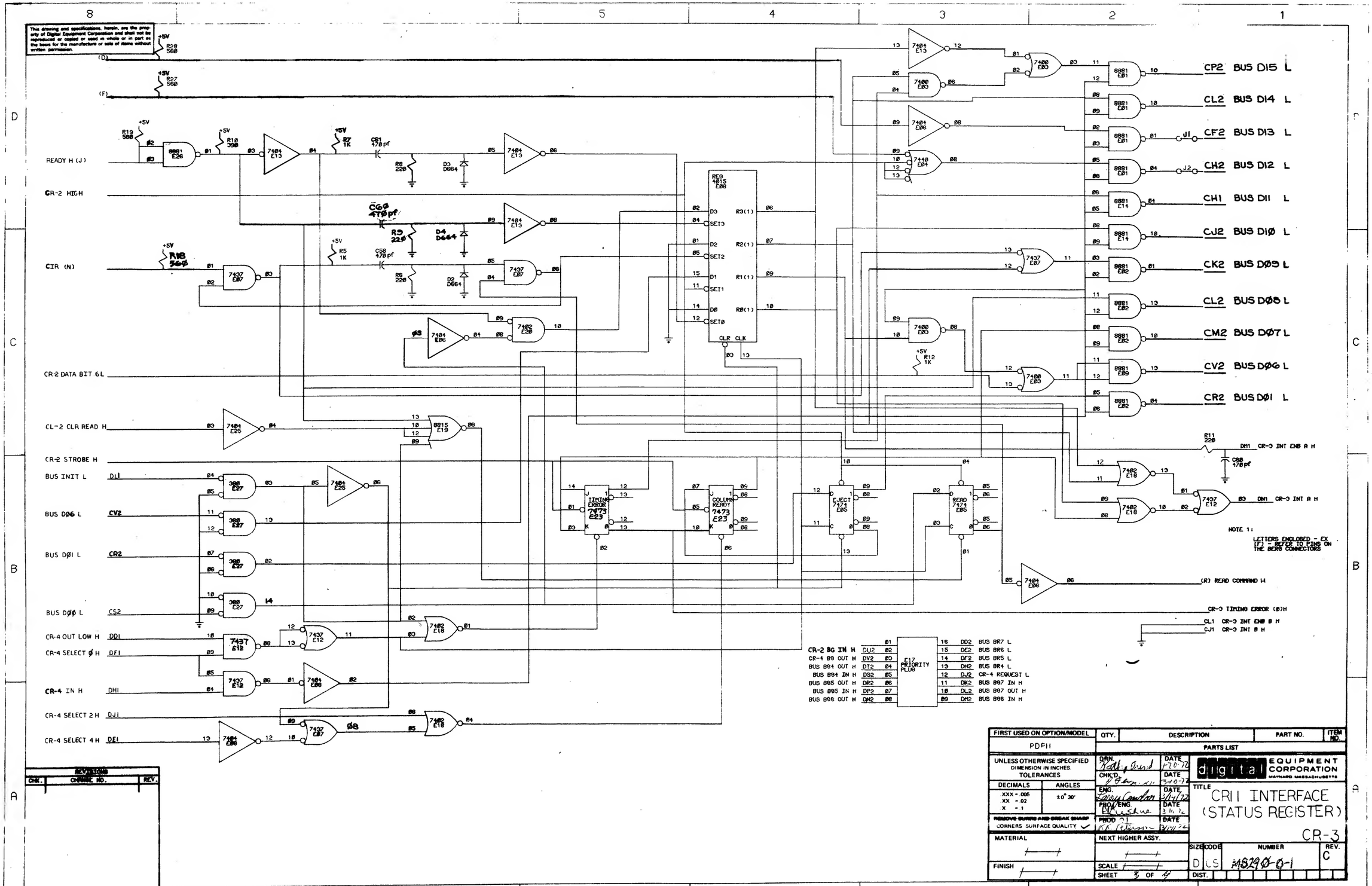

This drawing and specifications, herein, are the property of Digital Equipment Corporation and shall not be reproduced or copied or used in whole or in part as the basis for the manufacture or sale of items without written permission.
READY H (J)
CR-2 HIGH
CIR (N)
CR-2 DATA BIT 6L
CL-2 CLR READ H
CR-2 STROBE H
BUS INIT L
BUS DØ6 L
BUS DØ1 L
BUS DØØ L
CR-4 OUT LOW H
CR-4 SELECT Ø H
CR-4 IN H
CR-4 SELECT 2 H
CR-4 SELECT 4 H
CP2 BUS D15 L
CL2 BUS D14 L
CF2 BUS D13 L
CH2 BUS D12 L
CH1 BUS D11 L
CJ2 BUS D1Ø L
CK2 BUS DØ9 L
CL2 BUS DØ8 L
CM2 BUS DØ7 L
CV2 BUS DØ6 L
CR2 BUS DØ1 L
DM1 CR-3 INT ENB A H
DN1 CR-3 INT A H
(R) READ COMMAND H
CR-3 TIMING ERROR (Ø)H
CL1 CR-3 INT ENB B H
CJ1 CR-3 INT B H
CR-2 BG IN H
CR-4 BG OUT H
BUS BG4 OUT H
BUS BG4 IN H
BUS BG5 OUT H
BUS BG5 IN H
BUS BG6 OUT H
E17 PRIORITY PLUG
BUS BR7 L
BUS BR6 L
BUS BR5 L
BUS BR4 L
CR-4 REQUEST L
BUS BG7 IN H
BUS BG7 OUT H
BUS BG6 IN H
NOTE 1:
LETTERS ENCLOSED - EX (F) - REFER TO PINS ON THE BERG CONNECTORS
REVISIONS
CHK. CHANGE NO. REV.
FIRST USED ON OPTION/MODEL
PDP11
QTY. DESCRIPTION PART NO. ITEM NO.
PARTS LIST
UNLESS OTHERWISE SPECIFIED DIMENSION IN INCHES. TOLERANCES
DECIMALS .XXX = .005 .XX = .02 .X = .1
ANGLES ±0° 30'
REMOVE BURRS AND BREAK SHARP CORNERS SURFACE QUALITY
MATERIAL
FINISH
DRN. DATE 1-20-72
CHK'D DATE 3-10-72
ENG. DATE 3/14/72
PROJ ENG. DATE 3/14/72
PROD DATE 3/14/72
NEXT HIGHER ASSY.
SCALE
SHEET 3 OF 4
digital EQUIPMENT CORPORATION MAYNARD MASSACHUSETTS
TITLE CR11 INTERFACE (STATUS REGISTER)
CR-3
SIZE D CODE CS NUMBER M8290-0-1 REV. C
DIST.

10

This drawing and specifications, herein
erty of Digital Equipment Corporation
reproduced or copied or used in
the basis for the manufacture or
written permission

BUS MSYN L EE1 11
BUS AI7 L ED1 12
BUS AI6 L EE2 10
BUS AI5 L ED2 09
BUS AI9 L EX2
BUS AI4 L EX1
BUS AI2 L EC1
EXT GND EA1
BUS AI1 L EL1
BUS AI0 L EP1
BUS AØ9 L ER1
BUS AØ8 L EN2
BUS AØ7 L EP2
BUS AØ6 L EU1
BUS AØ5 L EV1
BUS AØ4 L EU2
BUS AØ3 L EV2
BUS AØ2 L EF1
BUS AØ1 L EH1
BUS AØØ L EH2
BUS CØ L EJ2
BUS C1 L EF2

380 E30, 380 E29, 380 E29, 380 E30, 380 E28, 380 E34, 380 E34, 380 E34, 380 E33, 380 E33, 380 E33, 380 E33, 380 E29, 380 E28, 380 E28, 380 E29

8212 E32, 8212 E32, 8212 E32, 8212 E32, 8212 E42, 8212 E42, 8212 E42, 8212 E42, 8212 E37, 8212 E37, 8212 E37, 8212 E37

R30, R29, R33, R34, R35, R36, R37, R38, R39, R40, R41, R42

74H00 E36, 74H00 E36, 74H00 E36, 74H00 E36, 7402 E36, 7402 E36, 7402 E36

8815 E48, 8815 E41, 8815 E48, 8815 E41

ES2 CR-4 SELECT 8 H
ET2 CR-4 SELECT 2 H
ER2 CR-4 SELECT 4 H
ES1 CR-4 SELECT 6 H
EN1 CR-4 OUT LOW H
EH2 CR-4 OUT HIGH H
EH1 CR-4 IN H

EL2 REG SEL L
EB1 SSYN INH L
FJ1 BUS SSYN L
BUS MFR L FJ1
CR-2 BG IN H FB1
CR-3 INT ENB A H FV1
CR-3 INT A H FU1
CR-3 INT ENB B H FK2
CR-3 INT B H FH2
BUS SSYN L FC1
BUS BSY L FD1

8881 E31, 8881 E31, 8881 E31, 8881 E43, 74Ø5 E45, 74Ø2 E44, 8881 E43, 380 E39, 380 E39, 380 E39, 380 E39, 74H04 E46, 74H04 E46, 74H04 E46, 74H04 E46, 7408 E50, 7408 E50, 7408 E50, 7408 E50, 7408 E52, 7408 E52, 7408 E52, 7408 E52, 7402 E44, 7402 E44, 7408 E43, 7408 E43, 7408 E43, 7408 E43, 7400 E45, 7400 E45, 7408 E49, 7408 E49

R31 R32 C59 470 R43 R44 47 C61 300 R47 330

+5V

9602 7474 E51, 9602 7474 E51, 9602 7474 E51, 9602 7474 E53, 7474 E47, 7474 E47, 7474 E47

FAI CR-4 BG OUT H
FT2 BUS SACK L
FPI CR-4 REQUEST L
FE2 BUS DØ2 L
FMI BUS INTR L
FLI BUS DØ3 L
FN2 BUS DØ4 L
FP1 BUS DØ5 L
FT2 BUS DØ6 L
FHI BUS DØ7 L
FK1 BUS DØ8 L

NOTE 1:
UNLESS OTHERWISE INDICATED:
RESISTORS ARE 1Ø, 1/4W, 5%
CAPACITOR VALUES ARE IN PICOFARADS

NOTE 2:
THE ADDRESS LINES ARE TO BE JUMPERED FOR A 8 AND THE VECTOR LINES ARE JUMPERED FOR A 1. FINAL JUMPER CONFIGURATION TO BE DETERMINED AT SYSTEM CHECKOUT.

REVISIONS		
CHK	CHANGE NO.	REV.

FIRST USED ON OPTION/MODEL	QTY.	DESCRIPTION	PART NO.	ITEM NO.
PDP11		PARTS LIST		

UNLESS OTHERWISE SPECIFIED DIMENSION IN INCHES. TOLERANCES
DECIMALS .XXX ± .005, .XX ± .02, .X ± .1 — ANGLES ± 0° 30'
REMOVE BURRS AND BREAK SHARP CORNERS SURFACE QUALITY ✓
MATERIAL
FINISH

DPN. DATE 3-21-72
CHK'D DATE
ENG. DATE 3/21/72
PROJ ENG. DATE
PROD. DATE

digital EQUIPMENT CORPORATION MAYNARD MASSACHUSETTS

TITLE: CR11 INTERFACE (ADDRESS SELECTION & INTERRUPT CONT.) CR-4

NEXT HIGHER ASSY.
SIZE D | CODE CS | NUMBER M8290-0-1 | REV. C
SCALE
SHEET 4 OF 4
DIST.

11

This drawing and specifications, herein, are the property of Digital Equipment Corporation and shall not be reproduced or copied or used in whole or in part as the basis for the manufacture or sale of items without written permission.

REV B — NUMBER 7008738-0-0 — SIZE D — CODE 03006 — 3216

WIRE TABLE

ITEM NO	DESCRIPTION AWG	COLOR	FROM CONNECTION	WITH	TO CONNECTION	WITH	SIGNAL NAME
5	24 TWP	RED	P1-TT	3	P2-U	4	ROW 6 DATA
		BRN	P1-SS		P2-W		RETURN
		GRY	P1-RR		P2-V		ROW 7 DATA
		RED	P1-PP		P2-X		RETURN
		GRN	P1-NN		P2-Y		ROW 8 DATA
		WHT	P1-MM		P2-CC		RETURN
		ORN	P1-LL		P2-Z		ROW 9 DATA
		WHT	P1-KK		P2-DD		RETURN
		BLU	P1-JJ		P2-C		ROW 10 DATA
		WHT	P1-HH		P2-H		RETURN
		BLU	P1-FF		P2-M		ROW 4 DATA
		YEL	P1-EE		P2-S		RETURN
		BLU	P1-DD		P2-K		ROW 2 DATA
		BLK	P1-CC		P2-P		RETURN
		RED	P1-BB		P2-A		ROW 12 DATA
		BLU	P1-AA		P2-E		RETURN
5	24 TWP	ORN	P1-Z		P2-N		ROW 5 DATA
		BLK	P1-Y	3	P2-T	4	RETURN

WIRE TABLE

ITEM NO	DESCRIPTION AWG	COLOR	FROM CONNECTION	WITH	TO CONNECTION	WITH	SIGNAL NAME
5	24 TWP	GRN	P1-X	3	P2-L	4	ROW 3 DATA
		BLK	P1-W		P2-R		RETURN
		GRN	P1-V		P2-B		ROW 11 DATA
		YEL	P1-U		P2-F		RETURN
		YEL	P1-T		P2-D		ROW 1 DATA
		ORN	P1-S		P2-J		RETURN
		GRY	P1-R		P2-LL		PICK
		BLK	P1-P		P2-SS		RETURN
		BRN	P1-N		P2-MM		BUSY
		WHT	P1-M		P2-TT		RETURN
		GRY	P1-L		P2-AA		INDEX
		WHT	P1-K		P2-EE		RETURN
5	24 TWP	BRN	P1-J		P2-BB		READY
		BLK	P1-H	3	P2-FF	4	RETURN

LEGEND

NUMBER	DIM "X" (VARIATION)	DIM "Y" (PRECUT) REF
7008738-15	15 FEET ±3 IN	15 FEET 4.2 IN

NOTES

1. MANUFACTURING SHOULD USE MACHINE CRIMPING TOOL FOR THE ASSY OF PINS. (ITEM #3)
2. SPARE WIRES (ORG/RED, GRN/RED) TO BE CUT BACK UNDER CABLE JACKET.
3. PINS (ITEM #4) SHOULD BE CRIMPED USING ELCO HAND TOOL (06715-01) OR THE EQUIVALENT.

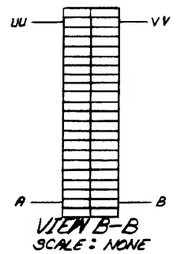

VIEW B-B
SCALE: NONE

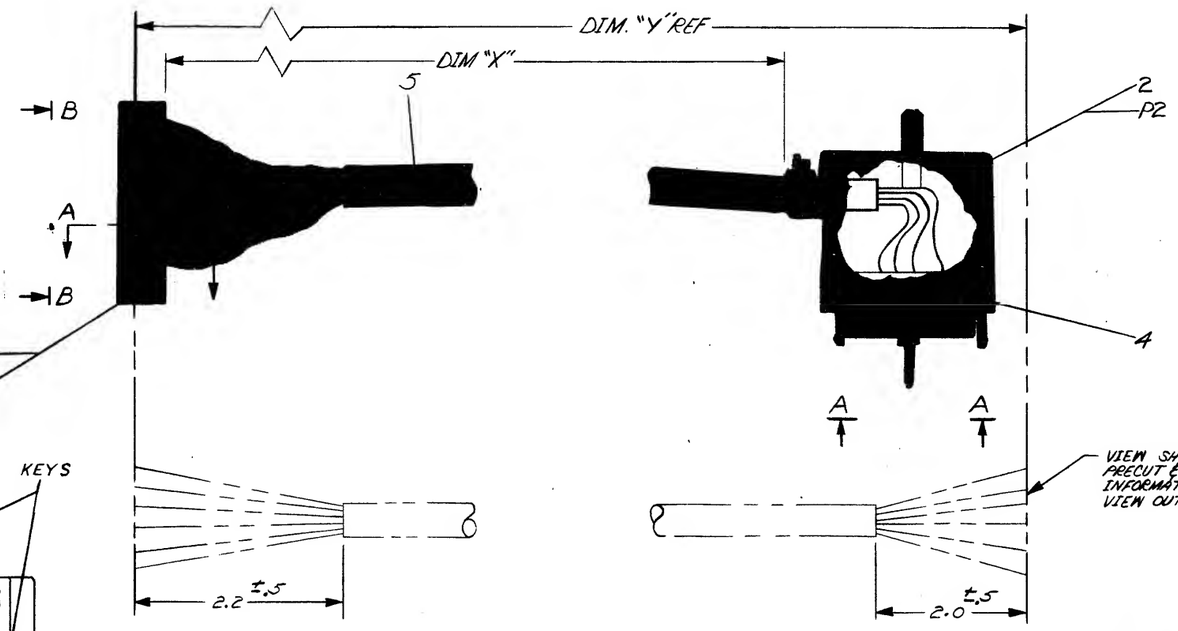

VIEW SHOWING PRECUT & STRIPING INFORMATION ONLY VIEW OUT OF PROJECTION

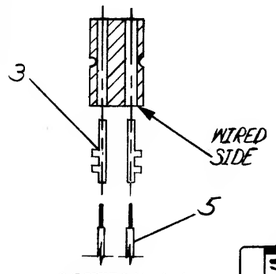

SECTION A-A
SCALE: NONE

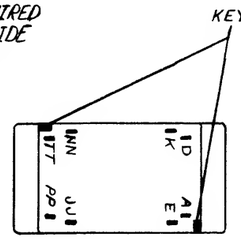

VIEW A-A
SCALE: NONE

REVISIONS				REV.
CHK	CHANGE NO			
JK	7008738-0-0001	J. KIRK	3-27-72	A
JK	7008738-0000	J. KIRK	4-28-72	B

R/R	DESCRIPTION	PART NO.	ITEM NO.
32	PIN ELCO #60-8017-03-13	1210675-1	4
32	SOCKET PIN 48015 BERG	1210089-5	3
1	CONNECTOR ELCO #00-8016-038-000-704	1210675	2
1	HOUSING BERG # 20383	1210090-0	1
	CABLE TWP #24 AWG	9107700	5

PARTS LIST

FIRST USED ON OPTION/MODEL: PDP 8/E

UNLESS OTHERWISE SPECIFIED DIMENSION IN INCHES. TOLERANCES
DECIMALS .XXX ±.005, .XX ±.01, .X ±.1; ANGLES ±0° 30'
REMOVE BURRS AND BREAK SHARP CORNERS SURFACE QUALITY ✓
MATERIAL —
FINISH —

DRN. M. Pierce 11/9/71
CHK. [illegible] 11/9/71
ENG. John Kirk 30 Jan 1971
PROJ ENG. John Kirk
PROD. J K Gibson 4 Feb 72

digital EQUIPMENT CORPORATION MAYNARD MASSACHUSETTS

TITLE: CABLE CARD READER INTERFACE

NEXT HIGHER ASSY. A-PL-CR8-E-0
SCALE NONE
SHEET 1 OF 1

SIZE D | CODE 03006 | NUMBER 7008738-0-0 | REV. B
DIST. —

DEC FORM NO DRD 100-A

12